LONG SEAMS	
COURSE	ORIENTATION
1	0°

Ship loose items:
NONE

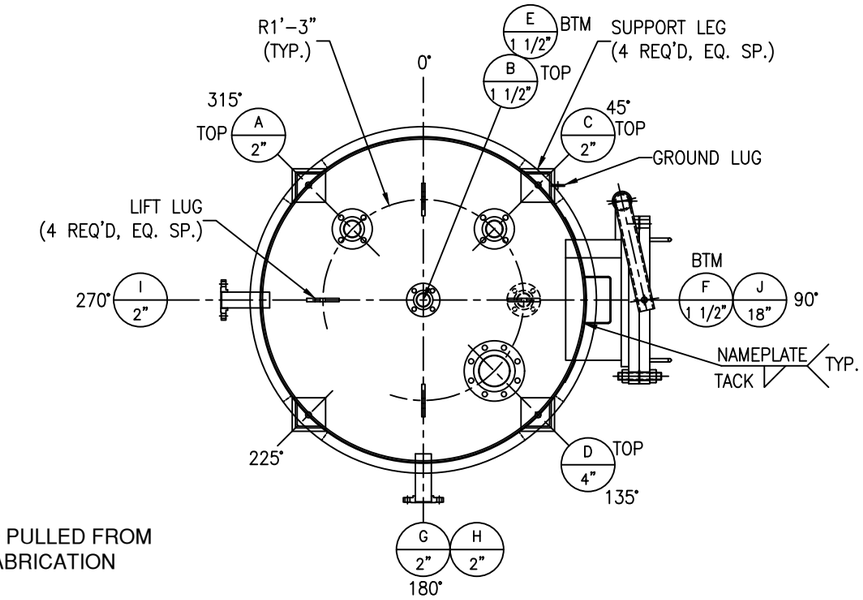

*NOTE: ALL ELEVATIONS ARE PULLED FROM WELD SEAM FOR EASE OF FABRICATION

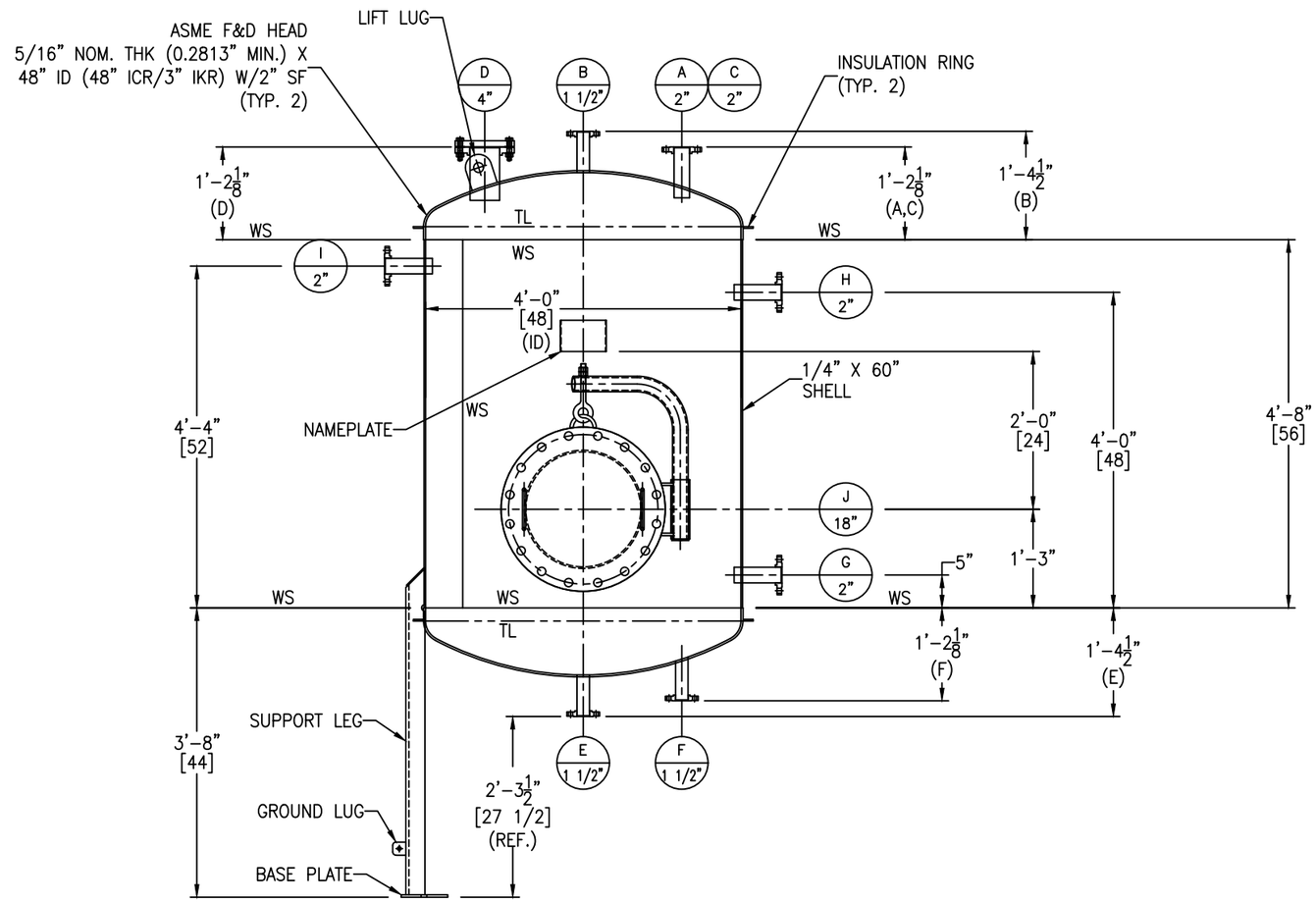

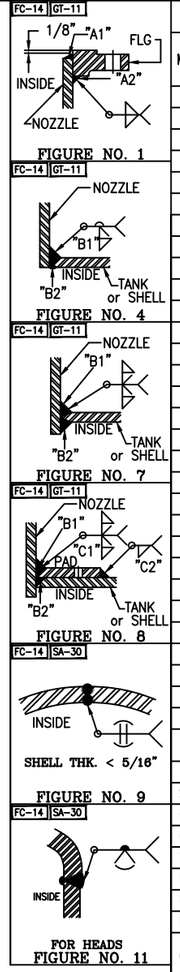

NOZZLE SCHEDULE

MARK	SERVICE	SIZE	RATING	TYPE / STYLE	NECK SCHED.	PROJECTION EXT. (E)	PROJECTION INT. (MIN.)	WELD FIGURE	REPAD SIZE (WIDTH X THK.)	WELD SIZE "A1"	WELD SIZE "A2"	WELD SIZE "B1"	WELD SIZE "B2"	WELD SIZE "C1"	WELD SIZE "C2"
A	RUPTURE DISC	2"	150#	RFSO	40S	SEE DWG	1"	1,7	–	3/16	3/16	3/16	3/16	–	–
B	VENT	1 1/2"	150#	RFSO	40S	SEE DWG	–	1,4	–	3/16	3/16	3/16	1/8	–	–
C	INLET	2"	150#	RFSO	40S	SEE DWG	1"	1,7	–	3/16	3/16	3/16	3/16	–	–
D	SPARE	4"	150#	RFSO W/BLIND	40S	SEE DWG	1"	1,7	–	1/4	1/4	3/16	3/16	–	–
E	OUTLET	1 1/2"	150#	RFSO	40S	SEE DWG	–	1,4	–	3/16	3/16	3/16	1/8	–	–
F	DRAIN	1 1/2"	150#	RFSO	40S	SEE DWG	–	1,4	–	3/16	3/16	3/16	1/8	–	–
G	BOTTOM LEVEL	2'	150#	RFSO	40S	6"	1"	1,7	–	3/16	3/16	3/16	3/16	–	–
H	TOP LEVEL	2"	150#	RFSO	40S	6"	1"	1,7	–	3/16	3/16	3/16	3/16	–	–
I	OVERFLOW	2"	150#	RFSO	40S	6"	1"	1,7	–	3/16	3/16	3/16	3/16	–	–
J	MANWAY	18"	150#	RFSO W/DAVIT	1/4"	8"	1"	1,8	3 1/2" X 1/4"	1/4	5/16	3/16	3/16	1/4	3/16

MATERIALS OF CONSTRUCTION

	VESSEL
SHELL	SA240-316/316L
HEADS	SA240-316/316L
RIM ANGLE	–
NOZZLE NECKS	SA312-316/316L WLD
NOZZLE FLANGES	SA182F-316/316L
MANWAY NECKS	SA240-316/316L
MANWAY FLANGES	SA182F-316/316L
GASKETS	SPIRAL WOUND GASKET W/ SS316 INNER RING AND CS OUTER RING & GRAPHITE FILLER
BOLTS/STUDS	SA193-B8M
NUTS	SA194-8M
REPADS	SA240-316/316L
COUPLINGS	–
SUPPORTS/HOLD DOWNS	SA479-316/316L & SA240-316/316L
LIFTING LUGS	SA240-316/316L
VACUUM RINGS	–
INSULATION RINGS	SA240-316/316L
GROUND LUG	SA240-316/316L
LADDER	–
TANK CLIPS (LADDER)	–
HANDRAIL	–
HANDRAIL CLIPS	–
PLATFORM	–
PLATFORM CLIPS	–
DIPTUBE SUPPORT	–
JACKET SHELL	–
JACKET HEADS	–
JACKET NOZZLE NECKS	–
JACKET NOZZLE FLANGES	–

DESIGN DATA

	VESSEL
DESIGN AND FAB. CODE	ASME
CERT. STAMP REQ'D.	YES
DESIGN PRESSURE	14.7 PSIG/-14.7 PSIG
DESIGN TEMPERATURE	300° F
MIN. DESIGN METAL TEMP.	-20° F @ 14.7 PSIG
OPERATING PRESSURE	0.2 PSIG
OPERATING TEMPERATURE	160° F
JOINT EFFICIENCY HEADS	0.70
JOINT EFFICIENCY SHELL	0.70
CORROSION ALLOWANCE	1/16" (SHELL & HEADS ONLY)
SPECIFIC GRAVITY	1.0
EARTHQUAKE ZONE	Ss = (0.380) S1 = (0.110)
WIND LOAD	120 MPH
STRESS RELIEF	NOT REQ'D
RADIOGRAPHIC EXAM	NOT REQ'D
DYE PENETRANT EXAM	NOT REQ'D
MAGNETIC PARTICLE EXAM	NOT REQ'D
HYDROSTATIC TEST	20 PSIG / GAUGE #11
PNEUMATIC TEST	NOT REQ'D
JKT HYDRO TEST	–
JKT DESIGN AND FAB. CODE	–
JKT CERT. STAMP REQ'D.	–
JKT DESIGN PRESSURE	–
JKT DESIGN TEMPERATURE	–
JKT MIN. DESIGN METAL TEMP.	–
JKT OPERATING PRESSURE	–
JKT OPERATING TEMPERATURE	–
JKT JOINT EFFICIENCY HEADS	–
JKT JOINT EFFICIENCY SHELL	–

VESSEL FINISH

INTERIOR WELD TREATMENT:	SAV TANK STANDARD
EXTERIOR WELD TREATMENT:	SAV TANK STANDARD
SAV TANK FINISHING STANDARD:	SEE NOTE 6
INSULATION:	1.5" BY OTHERS
PAINTING:	N/A

VESSEL CAPACITY AND WEIGHTS

OPERATING CAPACITY	400 GAL.
FULL CAPACITY	550 GAL.
EMPTY SHIPPING WEIGHT	1,900 LBS.
WEIGHT FULL OF WATER	6,800 LBS.
WEIGHT FULL OF PRODUCT	6,800 LBS.

ASME SECT. VIII, DIV. 1
2023 EDITION

ENG. _____ DATE: _____
Q.C. _____ DATE: _____
A.I. _____ DATE: _____

This drawing is issued for customer approval. please review, make approval changes (if any) in red. check the appropriate box, sign & date.

- ☐ Approval – no changes. Please proceed with fabrication.
- ☐ Approved as noted. Please proceed with fabrication
- ☐ Not approved. Please make changes and resubmit.

Customer signature _____ Date _____

GENERAL NOTES

1.) COVER ALL FLANGES, OPENINGS & MACHINED SURFACES PRIOR TO SHIPMENT UNLESS OTHERWISE NOTED.
2.) BOLT HOLES TO STRADDLE 0° & 180° UNLESS OTHERWISE NOTED.
3.) REPADS TO HAVE (1) ø1/4" NPT TELL-TALE HOLES FOR PNEUMATIC TESTING AT 2 PSIG FOR PRESSURE RETAINING PARTS. ALL OTHER REPADS TO HAVE (1) ø1/4" WEEP HOLE AT LOWEST POINT ON PAD.
4.) ASME CODE VESSELS TO BE IN ACCORDANCE WITH UG-80 & UG-81. TOLERANCES: +/- 1/8" FOR DIMENSIONS AND +/- 2 DEGREES FOR ORIENTATIONS.
5.) ASME MATERIALS TO CONFORM TO THE FOLLOWING: FLANGES – B16.5, FITTINGS – B16.9 & COUPLINGS – B16.11.
6.) PICKLE ALL EXTERIOR WELDS. PASSIVATE INTERIOR & EXTERIOR OF VESSEL.

REVISIONS

REV	D.BY	C.BY	DATE	DESCRIPTION
2				AS BUILT
1	RS	NP	9/15/25	CERTIFIED
0	AD	RS	8/22/25	APPROVAL

Savannah Tank & Equipment Corp.
1517 Telfair Road, Savannah, GA 31415
(912) 233-8902

DRAWN BY: AD
CHK'D BY: RS
APPROVED BY: NP
SCALE: 3/4" = 1'-0"

SOLVAY SPECIALITY POLYMERS USA, LLC
WASTE WATER TANK
EQUIP. #LD-480
CUST. PO #4514485869-5782-$05

DRAWING NO.: 087-25-1 SHT 1 OF 3 REV. SET 1

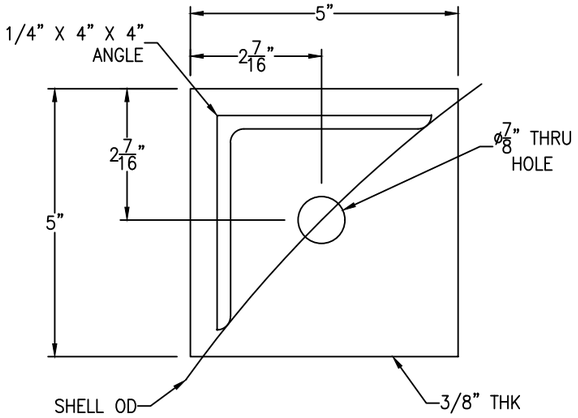

BASE PLATE DETAIL

(4 REQ'D) SCALE: 6" = 1'-0"

FC-14

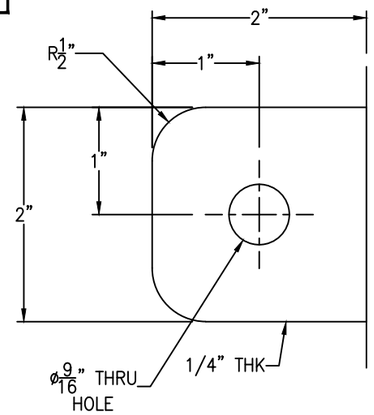

GROUND LUG IS LOCATED @ 45°

GROUND LUG DETAIL

SCALE: 1'-0" = 1'-0"

FC-14

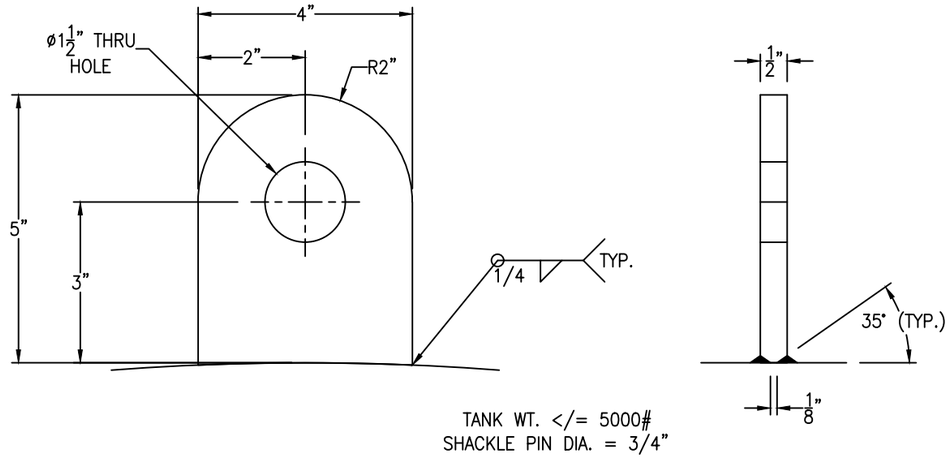

TANK WT. <= 5000#
SHACKLE PIN DIA. = 3/4"

LIFT LUG DETAIL

SCALE: 6" = 1'-0"

FC-14

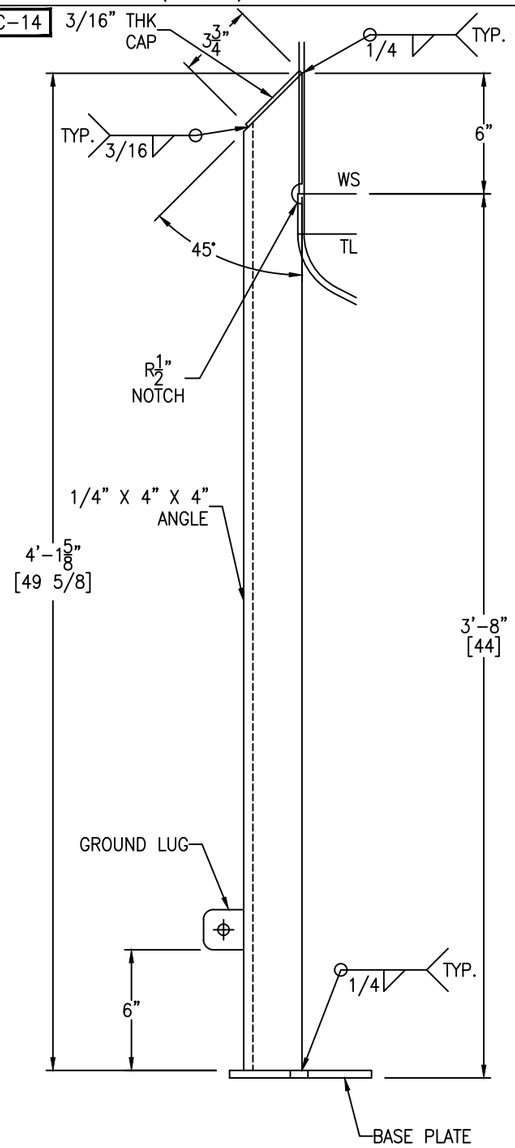

SUPPORT LEG DETAIL

(4 REQ'D) SCALE: 2 1/4" = 1'-0"

FC-14

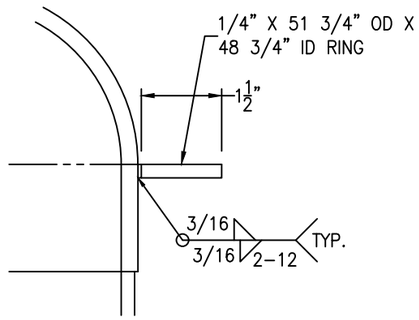

TOP INSULATION RING DETAIL

SCALE: 6" = 1'-0"

FC-14

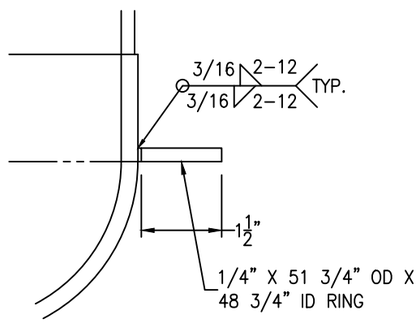

BOTTOM INSULATION RING DETAIL

SCALE: 6" = 1'-0"

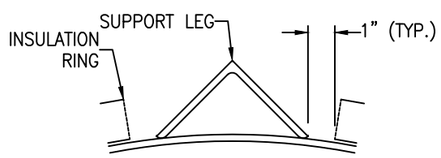

BOTTOM INSULATION RING CUTOUT DETAIL

(4 REQ'D) SCALE: 3" = 1'-0"

Bolting for blinds
D: (8) 5/8"-11 NC x 3" HH BOLT
(8) 5/8"-11 NC HH NUT
(1) 4" 150# SPIRAL WOUND GASKET W/ SS316 INNER RING AND CS OUTER RING & GRAPHITE FILLER

REV	D.BY	C.BY	DATE	DESCRIPTION
2				AS BUILT
1	RS	NP	9/15/25	CERTIFIED
0	AD	RS	8/22/25	APPROVAL

⚠ REVISIONS

Savannah Tank & Equipment Corp.
1517 Telfair Road, Savannah, GA 31415
(912) 233-8902

DRAWN BY: AD
CHK'D BY: RS
APPROVED BY: NP
SCALE: 3/4" = 1'-0"

SOLVAY SPECIALITY POLYMERS USA, LLC
WASTE WATER TANK
EQUIP. #LD-480
CUST. PO #4514485869-5782-$05

DRAWING NO.: 087-25-2 SHT 2 OF 3 REV. SET 1

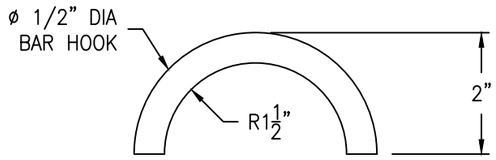

HOOK DETAIL

(1 REQ'D) SCALE: 6" = 1'-0"

FC-14

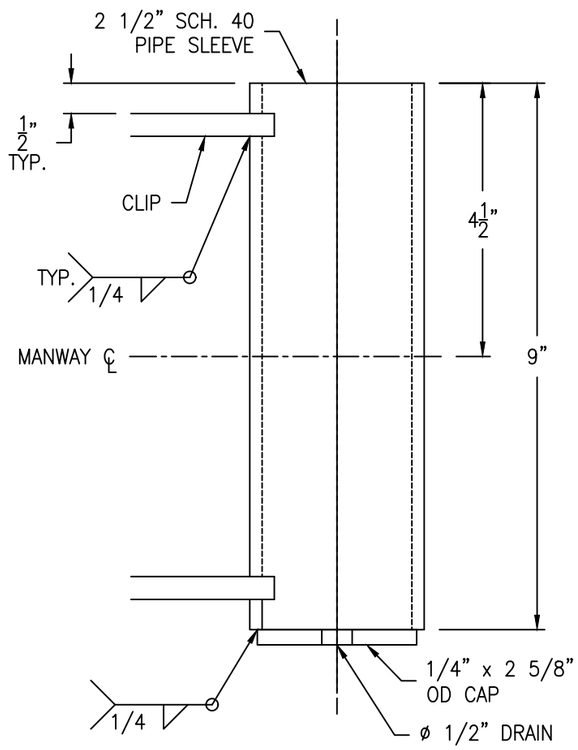

SLEEVE DETAIL

(1 REQ'D) SCALE: 6" = 1'-0"

FC-14

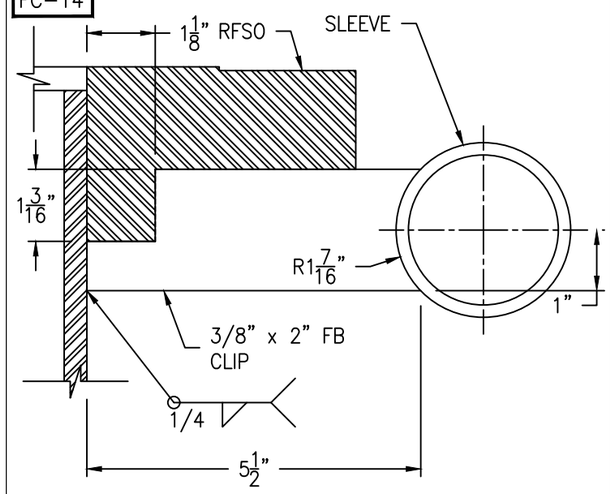

CLIP DETAIL

(2 REQ'D) SCALE: 6" = 1'-0"

FC-14

Bolting for blind
(16) 1 1/8-7 NC x 6 1/2" FULL THREADED STUD
(32) 1 1/8-7 NC HH NUT
(1) 18" 150# SPIRAL WOUND GASKET W/ SS316 INNER RING AND CS OUTER RING & GRAPHITE FILLER

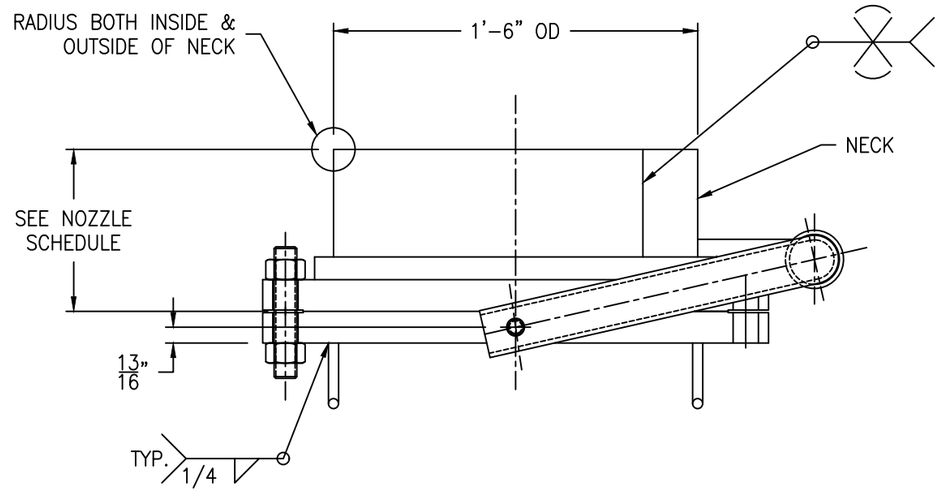

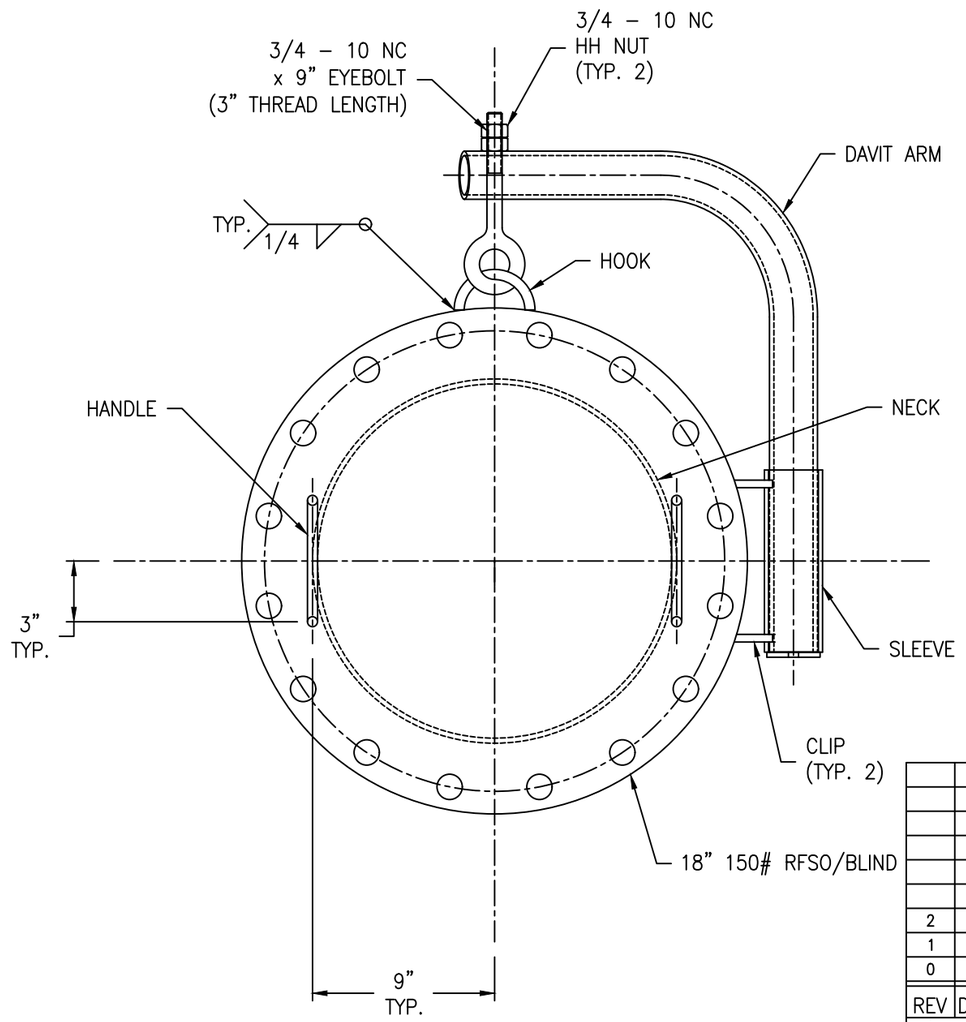

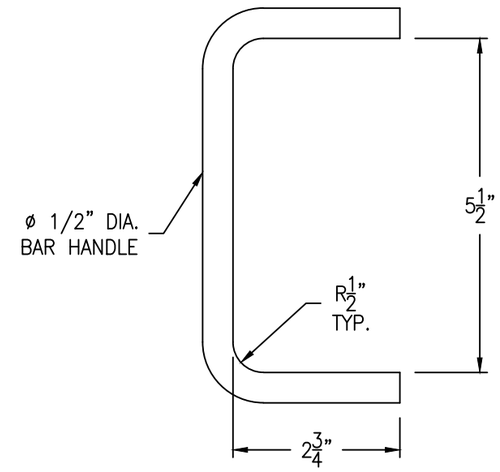

HANDLE DETAIL

(2 REQ'D) SCALE: 6" = 1'-0"

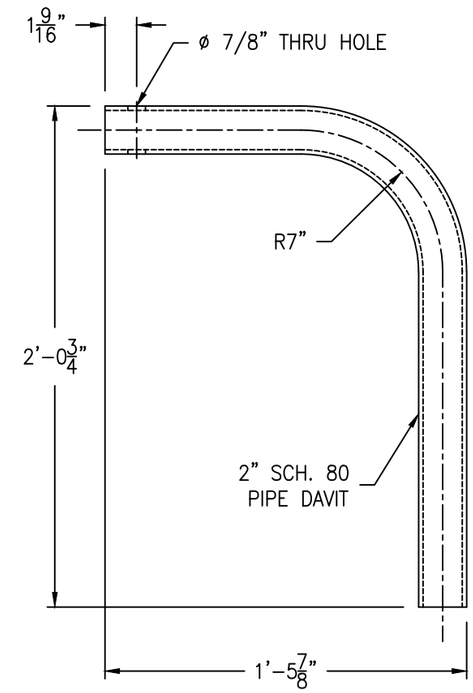

DAVIT ARM DETAIL

(1 REQ'D) SCALE: 2" = 1'-0"

REV	D.BY	C.BY	DATE	DESCRIPTION
2				AS BUILT
1	RS	NP	9/15/25	CERTIFIED
0	AD	RS	8/22/25	APPROVAL

△1 REVISIONS

Savannah Tank & Equipment Corp.
1517 Telfair Road, Savannah, GA 31415
(912) 233-8902

DRAWN BY: AD
CHK'D BY: RS
APPROVED BY: NP
SCALE: 2" = 1'-0"

SOLVAY SPECIALITY POLYMERS USA, LLC
WASTE WATER TANK
EQUIP. #LD-480
CUST. PO #4514485869-5782-$05

DRAWING NO.: 087-25-3 SHT 3 OF 3 REV. SET 1